ANSA
µETA
pioneering
software systems

pre- & post-processing for powertrain

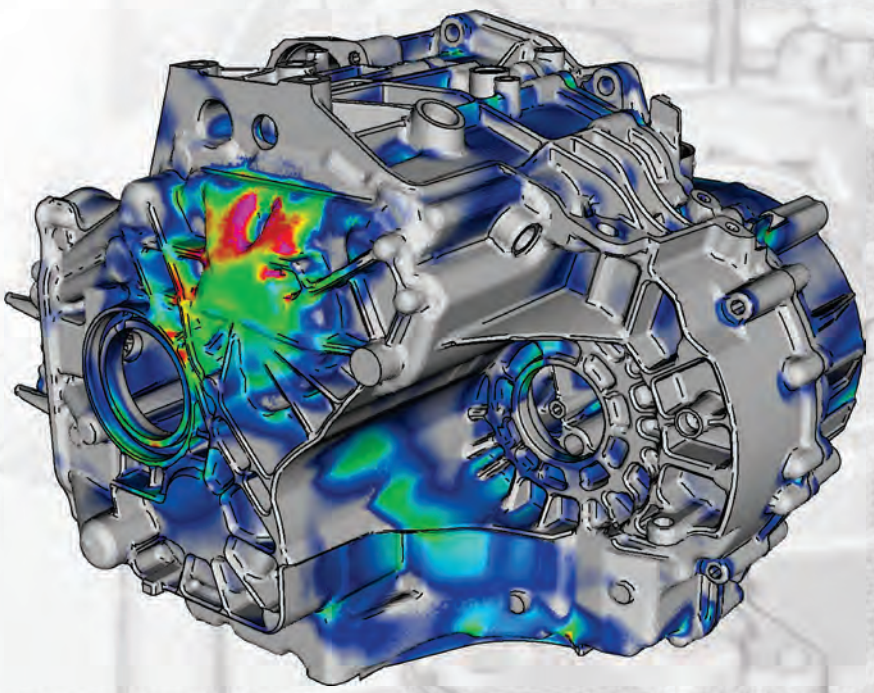

BETA
CAE Systems SA
www.beta-cae.gr

With its complete solutions for meshing, assembly, contacts definition and boundary conditions set-up, ANSA becomes the most efficient and effective solution for powertrain pre-processing.
An easy to set-up, fast and robust, meshing algorithm (Solid structural mesh) that ensures very accurate capturing of geometrical features, and a powerful and versatile assembly center for the generation and handling of bolt models have been specifically developed to satisfy the most demanding powertrain CAE teams.

Translation

With ANSA, the information ported from CAD is not limited to the geometric descriptions of the components but extends to the product structure together with several μETA data such as the name, the number and version of each component, its position matrix, and its material information.

Set-up of meshing

The mesh result is dominated by 4 parameters:
a. Target element length
b. Distortion angle and distance (chordal deviation)
c. Maximum aspect ratio
d. Minimum element length
Feeding these parameters to the Batch Meshing Wizard automatically generates the appropriate mesh parameter and quality criteria files.

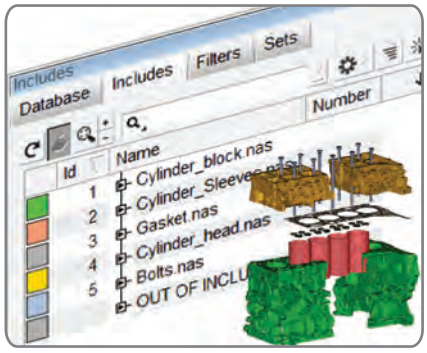

Feature recognition

Geometrical features are automatically detected ant the feature treatment is easily defined. Fillets are automatically identified by their shape and continuity, requiring no radius and width specifications. Tubes are also recognized likewise, with no need for additional input. Also, flange areas are detected based on parts proximity and shape.

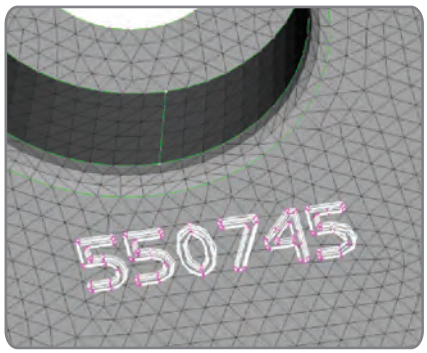

Geometry simplification

Narrow geometrical faces are automatically removed, generating wider and better shaped meshing areas. Imprinted and protruded logos can be totally removed. In the case of narrow ribs their sharp edges are automatically recognized and maintained.

Fillets treatment

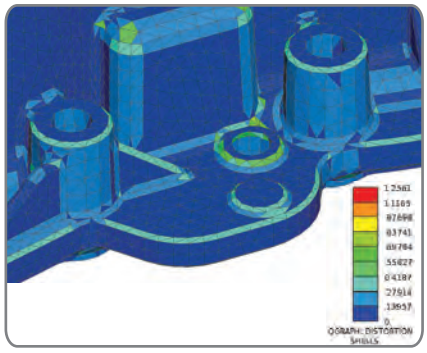

Number of elements in the fillets' width is controlled by the designated distortion and minimum element length, ensuring precise geometry representation with the minimum input requirements. Along the fillets, the element length is controlled by the prescribed quality criteria of aspect ratio and skewness, or by setting a local target lenght. The user can select among orthogonal and equilateral trias arrangement.

Calculations in µETA

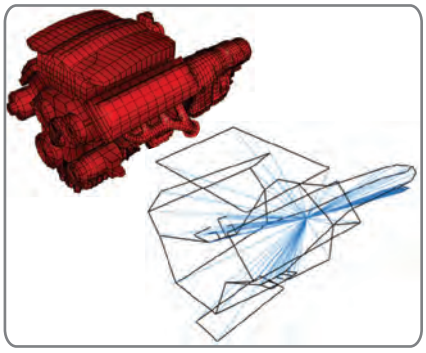

Numerous tools are available in µETA to calculate results directly based on the results read.

- The Linear Combination tool allows for the combination of results of unit loads for the generation of combined loads results
- The User Field Function tool allows for the creation of new results sets as a function of existing results. It can generate deformation, scalar and vector results
- The Modal Correlation tool allows for the calculation of the modal assurance criterion
- The Modal response tool can calculate responses from the normal modes either with loads imported through a keyword file in µETA, or directly generated in µETA
- The Modal Model Builder enables the generation of a modal, "reduced" representation of an assembly, given the results of the modal analysis

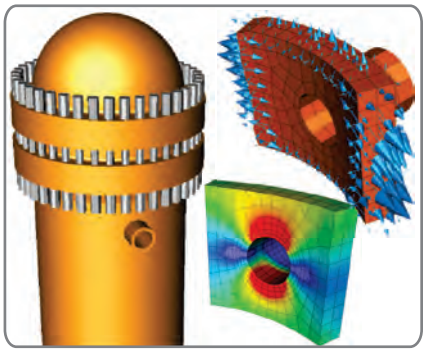

Section forces

The Section forces tool of µETA is a valuable tool for the calculation of Forces and Moments on sections. Its accuracy allows for the calculation of new sections within µETA without having to repeat the task of defining them in Pre-Processor and running again the analysis. Moreover, the Section Forces tool offer the option to export grid force vectors. These can be used as Boundary conditions to accurately replace areas of the model with little or no interest. In this way the model size can be reduced while in the same time the accuracy of the calculations is improved.

Model comparison

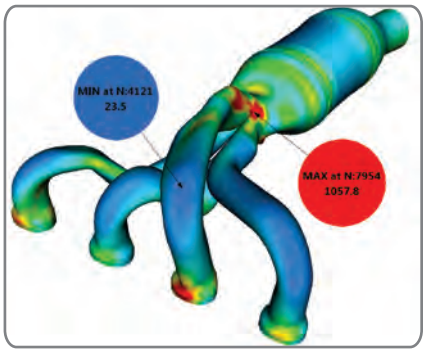

Dedicated tools are available for the comparison of different models and different runs.

- The Multi-model statistics tool, presents in a tabulated manner a comparison of extreme values between loaded models and for the user selected states. User-specified properties, materials, groups, elements or nodes can be added to the table
- The overlay tool can use the currently generated session file or project file as a template, and, by adding a different set of result files, perform exactly the same post-processing actions on both 3d and 2d-data

2d plots

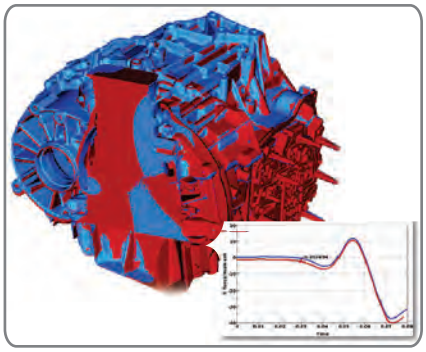

2d plots can be generated directly from solver result files or from the 3d-model. Also, test data are supported for the correlation of simulation and real test results. Also ,2d plots can be synchronized with the 3d model.

μETA is a complete solution for multi-disciplinary post-processing that stands out due to its model organization capabilities, the variety of tools for the assessment of the results, the available functionalities for the identification of the areas of interest and hot spots, the tools for direct calculations based on solver results, the options for the communication of the results and for its automation capabilities.

Model navigation

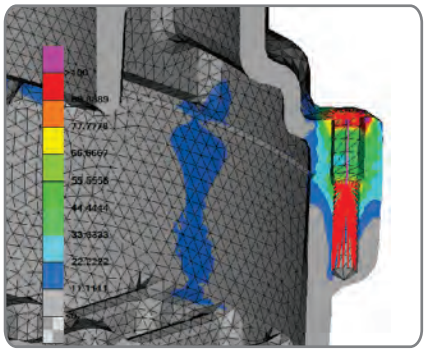

μETA offers model organization capabilities that are crucial in handling complex assemblies. These capabilities are made possible through the Parts Manager, Connection , Sets, and Properties and Material lists. Model structure connection and information are passed through ANSA comments in μETA. The sets and the loads from the result file are listed in the Sets list. Properties and Material lists are also available, in a similar to ANSA way.
A variety of tools are offered for the assessment of the results. Such tools offer:

- Exploded view that provides with great assistance in the visualization of the results when contact pairs are involved and results need to be viewed on the different contact surfaces
- Cutting planes which is especially useful when solid elements are involved
- Fringe bars with transparent colors.
- Iso-contours that can be generated to highlight the area of interest
- Measurements for identifying distances between parts, different stages, points and distances

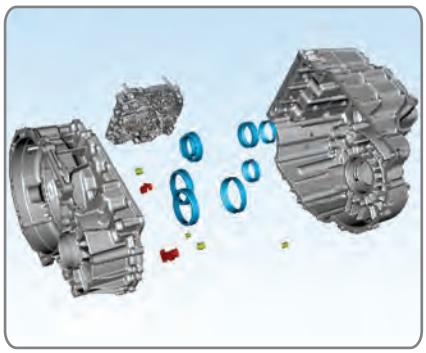

Communication of the results

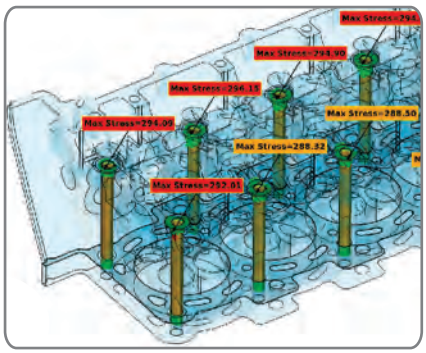

μETA integrates a very powerful functionality for the identification of areas of interest and hot-spots. The results of filters can be presented by selecting the filtered entities, using the identification tool, by isolating the filtered entities, or by adding annotations. Filters can be saved and then reused. Additionally, filters can be automatically synchronized with states and thus when moving from one stage to another the filters will be re-applied.
Results can also be presented in a tabulated manner through the Statistics tool. This list can display nodes, elements, parts and materials. It can also display user-specified results and statistic values. The user can add custom columns, create mathematical operations between existing columns and transfer data to the embedded spreadsheet editor for further process.

Parametric points

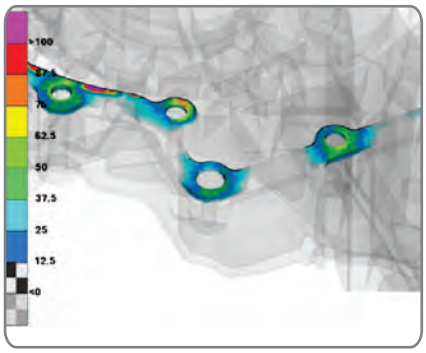

The identification of arbitrary points can be accomplished by either manually selecting them using the mouse or by specifying the coordinates, even if the points lie outside the model boundaries. Additionally it is possible to identify points and nodes on a linear or circular path. Parametric points are available in various tools such as the Identify and the Statistics tools.

Tubes treatment

The number of elements along the tubes' perimeters is controlled by the designated distortion and minimum element length and is maintained along the tubes' height with the use of orthogonal trias. Zones of orthogonal or equilateral trias and user-specified width can be generated around the top and bottom rings of the tube. Narrow tubes can be filled.

Flanges treatment

The mesh density on solid flanges can be increased to assure a contact of better quality. At the same time the meshing algorithm ensures that no flange mode is moved away from the surface during the internal phase of quality improvement.

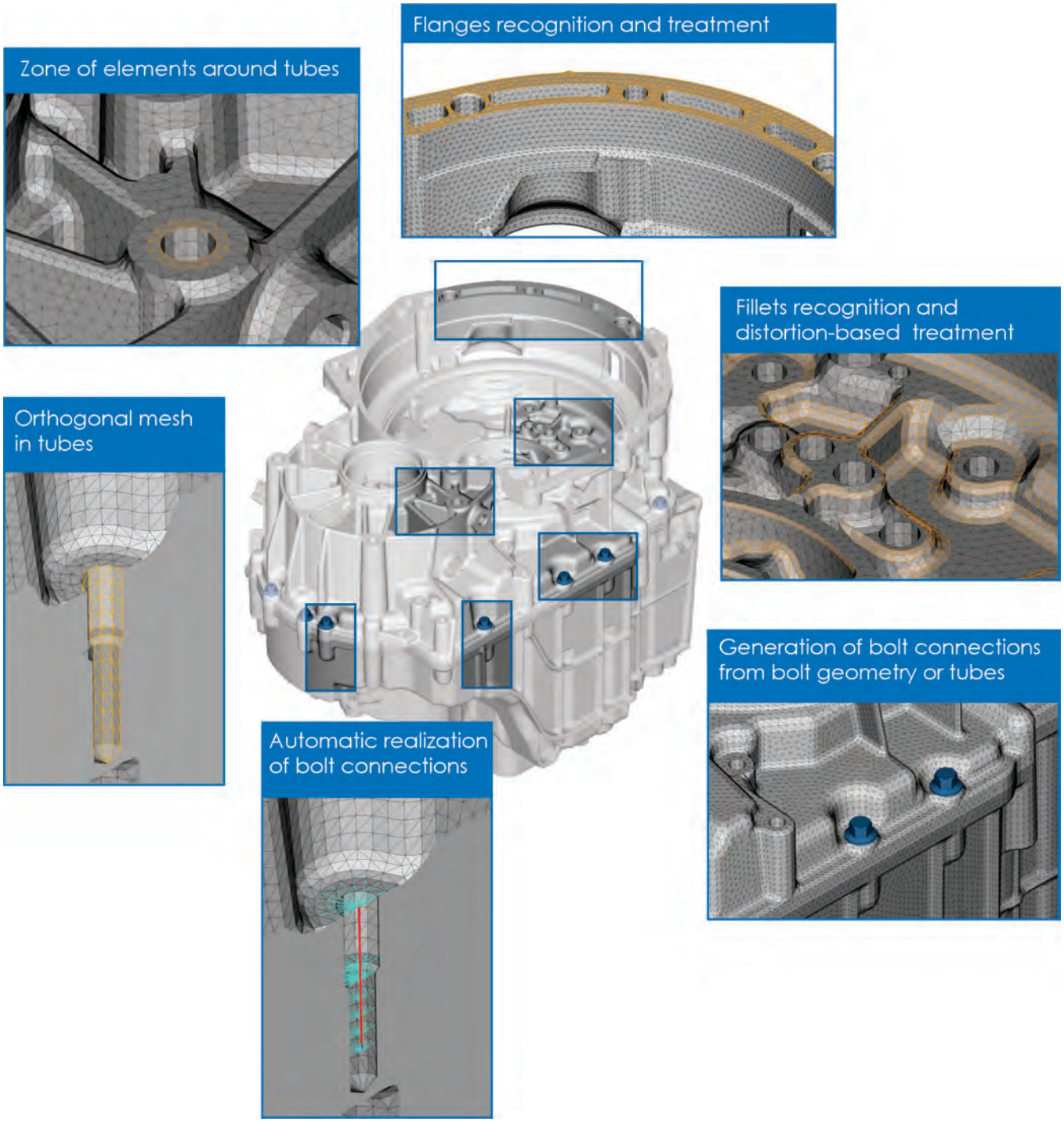

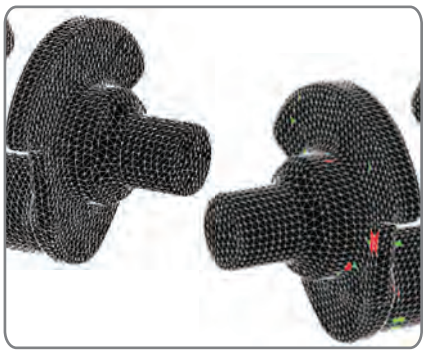

Second order mesh

The 2nd order nodes are always located on the geometry and not on a straight edge. This way, the component's shape is most accurately represented and the deviation of the CAE model mass from the actual mass is minimized. The elements' quality is efficiently controlled with the jacobian criterion.

Mesh quality improvement

Several tools are available for the check and verification of the mesh quality, from the on-screen visualization of quality violations, to the automatic generation of quality reports. Distortion and distance from geometry graphs are offered to assure the precise capturing of geometrical features. For all those cases when quality improvement is necessary, very powerful automatic tools are offered to handle both shells and solids, either by slightly moving nodes, or by local reconstruction of the mesh topology.

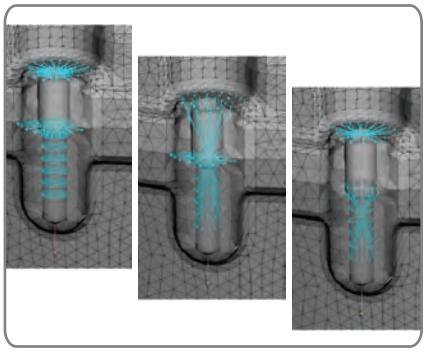

Bolts modeling

Reduced representations of bolts, consisting of any combination of elements, are generated with the aid of bolt connections. A bolt connection holds all the important information of bolt joints like the diameter, the head or washer diameter the length and the connected parts. Bolt connection entities can be transferred from one model to another through connection files and are realized into suitable FE-representations with the aid of the Connection Manager.

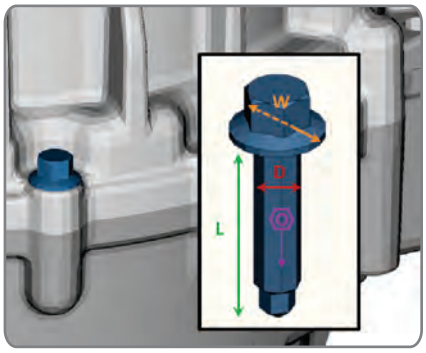

Bolt connections generation

Bolt connections can be automatically generated from bolt geometries, inheriting from the latter geometrical attributes like the location, orientation, diameter, head diameter and length. In case of lack of the bolt geometries, bolt connections can be automatically generated from bolt holes and tubes. In either case, the bolt connectivity is detected by performing a search in the bolt's vicinity, and is expressed either with part numbers or property ids.

Bolt connections realization

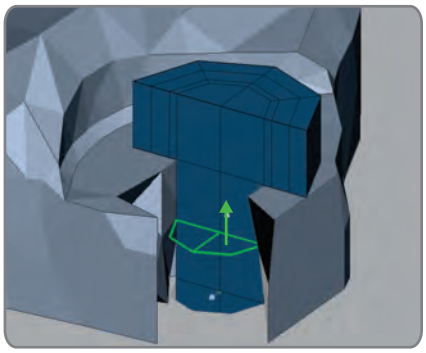

With the aid of the Connection Manager, multiple bolt connections can be realized into suitable FE-representations in a single step. A multitude of bolt FE-model options are available for the generation of the bolt body and its attachment to the connected parts. Bolt connections are automatically re-applied after part replacement, allowing the effortless update of the assembly.
Pre-loading of the bolts can be easily defined, either with the set-up of pre-tension keywords -for the solvers that support such- or with the definition of thermal loads, using the thermal expansion properties of the material.

Contacts definition

Contact areas between solid parts are automatically detected based on proximity. Master-slave contact constraints are directly defined either using contact card templates or with the default values, and with the contact clearance being automatically updated.

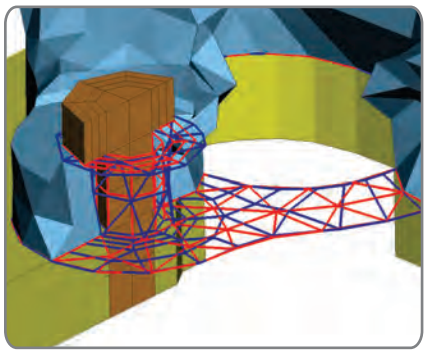

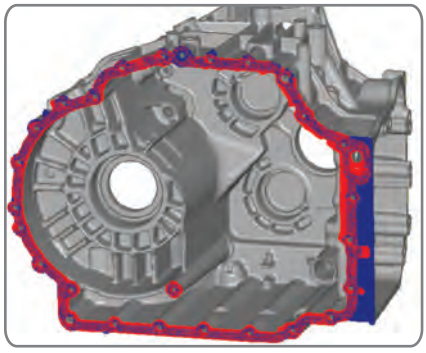

Features

- Include-files handling
- Batch mesh dominated by target element length, distortion angle and distance, maximum aspect ratio and minimum element length
- Geometry simplification
- Fillets, Tubes, and Flanges treatment
- Second order mesh for more accurate representation
- Mesh quality improvement
- Bolts modeling through reduced representations consisting of any combination of elements
- Automated bolt connections generation from bolt geometries
- Multiple bolt connection realization into FE-representation in a single step
- Automatic contact definition
- ANSA can be easily coupled with any parametric optimizer
- FE & geometry morphing 2D & 3D parametric morphing

Benefits

- Time-efficient pre-processing that minimizes cost and time to market
- High end solutions for meshing, model assembly and boundary conditions set-up
- Configuration files and templates allow for the standardization of the pre-processing steps ensuring repeatability and enforcing robustness

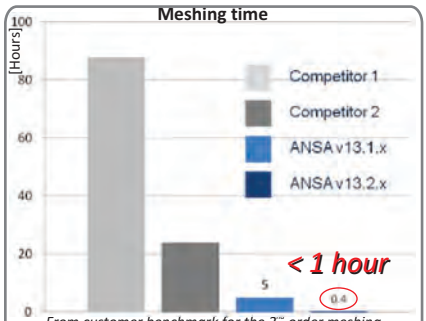

From customer benchmark for the 2nd order meshing of a cylinder-head

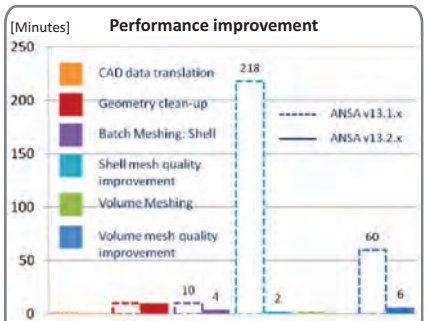

For the 2nd order meshing of a cylinder-head

User toolbars

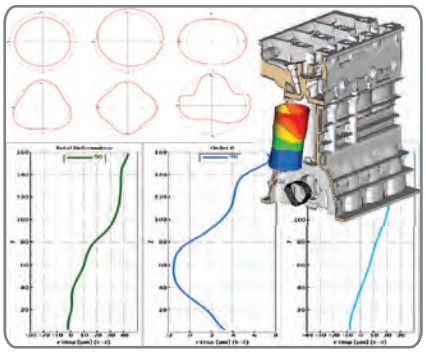

Courtesy of Volkswagen AG and Forschungsvereinigung Automobiltechnik

µETA comes with a collection of user toolbars.

- The Cylindrical Coordinate System toolbar allows for the effortless generation of cylindrical coordinate systems, for transforming results on bores and cylinders
- The Equivalent Radiated Power (ERP) toolbar performs the calculation of equivalent radiated power results on element, part or model level and these results are visualized as new result labels. ERP results are calculated based on displacement, velocity or acceleration results output by Nastran
- The Bore distortion analysis toolbar enables the calculation of Fourier orders of deformations on bores. Selected orders can be plotted. Additionally, a new state with the 3d deformations for selected orders is generated

Reporting

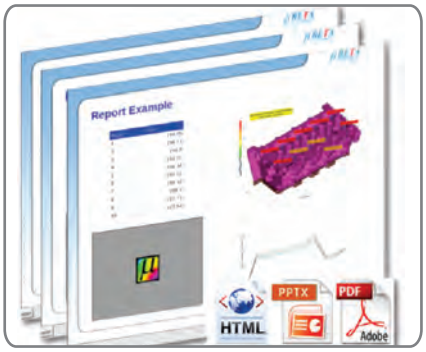

One of the strongest points of meta-post is the very powerful report generation. Reports with custom contents and layout can be generated through the Report Composer and exported in html, pptx or pdf formats. Images and tables can be easily added, by dragging and dropping. Text boxes can be added and formatted. Basic shapes can be generated in the common PowerPoint-style. The report generation can be fully automated for a quick, ANSA deck-info like html report. The Model Report tool can be also used, for selected states and results.

Features

- Ability to handle complex models
- A variety of tools for the assessment of interest areas and hot spots
- Statistics tool
- Ability to transfer data from the statistics table to an embedded spreadsheet editor
- Calculation of results based on solver inputs
- Powerful graph tool
- Correlation and synchronization of simulation and real test results
- Automation of post processing tasks
- Comparison between of different models and runs
- A PowerPoint-style Report Composer that can be fully automated
- Can be coupled with any parametric optimizer

Benefits

- Time-efficient post processing that minimizes cost and time to market
- Easy handling of complex models
- A wide collection of tools in an intuitive user-interface
- Flexibility through filters use
- Powerful automation capabilities allow the standardization of post processing sequences and the fast generation of reports in pptx, html or pdf formats

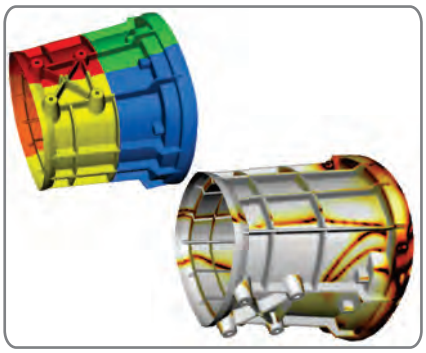

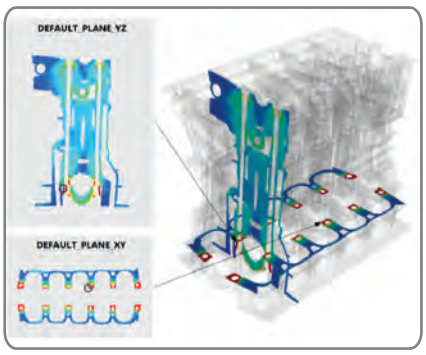

BETA CAE Systems S.A.
Kato Scholari, Thessaloniki, GR-57500 Epanomi, Greece
Tel: +30-2392-021420, +30-2311-993300, Fax: +30-2392-021828
Email: ansa@beta-cae.gr, URL: http://www.beta-cae.gr